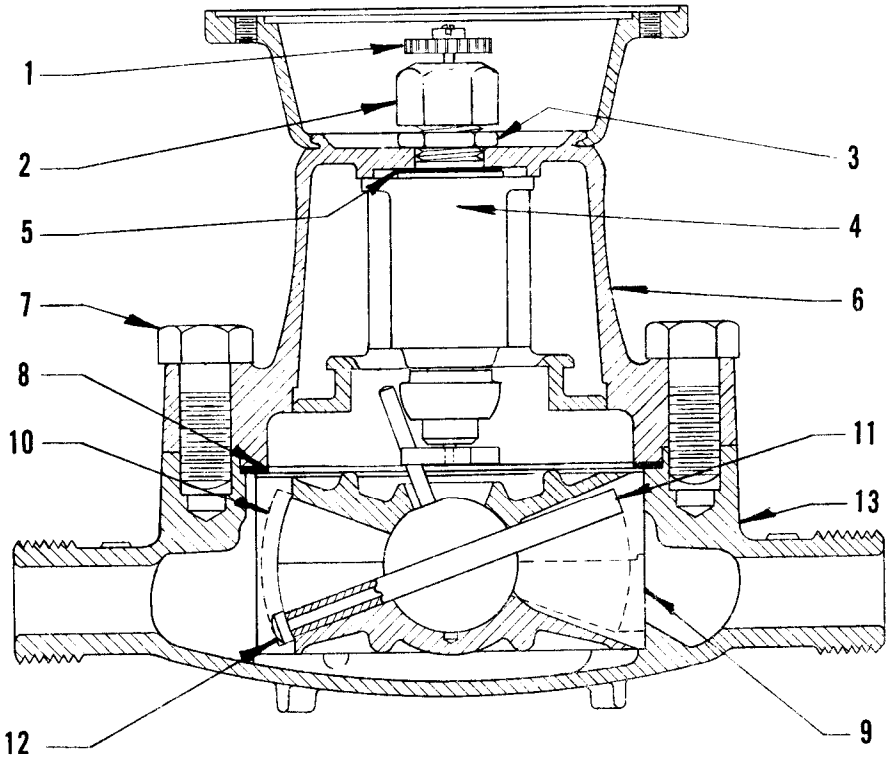
1
2
3
5
4
7
6
8
10
11
13
12
9

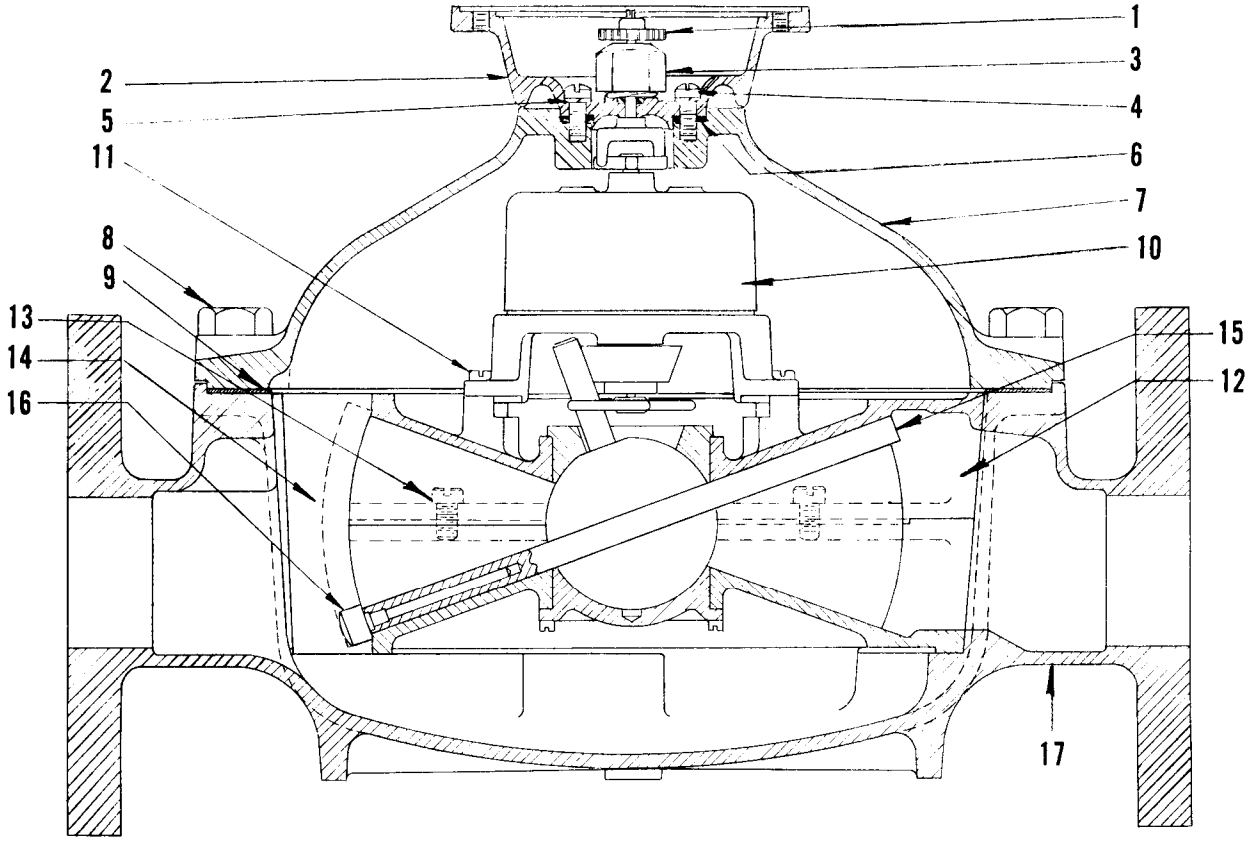
1
2
3
5
4
11
6
7
8
10
9
13
15
14
12
16
17

5/8", 3/4" and 1" Type S METERS

Index	Part	Part No.		
		5/8-inch	3/4-inch	1-inch
1	Change Gear (Give diam. and No. of teeth)	69400-999	69400-999	69400-999
2	Stuffing Box Nut (packed)	8834-000	8834-000	8834-000
3	Nut, Clamp	34-000	34-000	34-000
4	Gear Train Complete*			
	16 reduction	67-191	67-191	67-191
	64 reduction	67-068	67-068	67-068
	256 reduction	67-074	67-074	67-074
5	Gasket, Lead	4859-002	4859-002	4859-002
6	Main Case, Upper Half	244-021	244-019	2200-008
7	Cap Screw, Main Case	100071-098	100071-098	100071-098
8	Gasket, Main Case	4858-010	4861-013	4862-012
9	Measuring Chamber Complete	285-101	312-062	286-111
10	Bearing Plate, Thrust Roller	2007-007	2005-005	2006-005
11	Disc Piston with Roller	309-046	310-031	311-034
12	Thrust Roller	81-019	81-019	190-010
13	Main Casing, Lower Half	246-032	5364-004	2423-001

*For ratios not listed, give reduction as stamped on lower plate of gear train.

1½" and 2" Type S METERS

Index	Part	Part No.	
		1-1/2 inch	2-inch
1	Change Gear (Give dia. and No. of teeth)	69400-999	69400-999
2	Cup, Register	40052-001	40052-001
3	Stuffing Box Nut (packed)	40345-001	40345-001
4	Screw, 10-32 x 1/2 pan hd st	42488-001	42488-001
5	Lockwasher, No. 10 Split st	41211-000	41211-000
6	Gasket, Reg. Cup, asbestos	42318-002	42318-002
	vellumoid	42318-000	42318-000
7	Main Casing Cover	789-015	819-015
8	Bolt, Main Casing	6583-000	6583-000
9	Main Casing Gasket, durabla	4863-005	4864-006
	asbestos	4863-008	4864-011
10	*Gear Train Complete		
	4 Reduction	766-004	767-004
	64 Reduction	766-001	767-001
	256 Reduction	766-002	767-002
11	Screw, Gear Train Clamp	733-001	733-001
12	Measuring Chamber with Disc	788-143	818-137
13	Screw, Chamber Assembling	-	2387-001
14	Bearing Plate, Thrust Roller	1994-008	1995-007
15	Disc Complete	8838-028	8841-032
16	Thrust Roller	787-011	817-012
17	Main Casing, round flange	4887-007	4890-008

*For ratios not listed, give reduction as stamped on lower plate of gear train.